WILO (U.K.) Ltd
Second Avenue
UK DE14 2WJ Staffordshire, United Kingdom
Phone
Fax

# TOP-STG 30/7 1~ PN 10

System: Standard pump

| | | |
|---|---|---|
| Customer | Project | Page 1 / 1 |
| Customer no. | Project no. | |
| Contact | Position no. | Date 2013-12-04 |
| Care of | Location | |

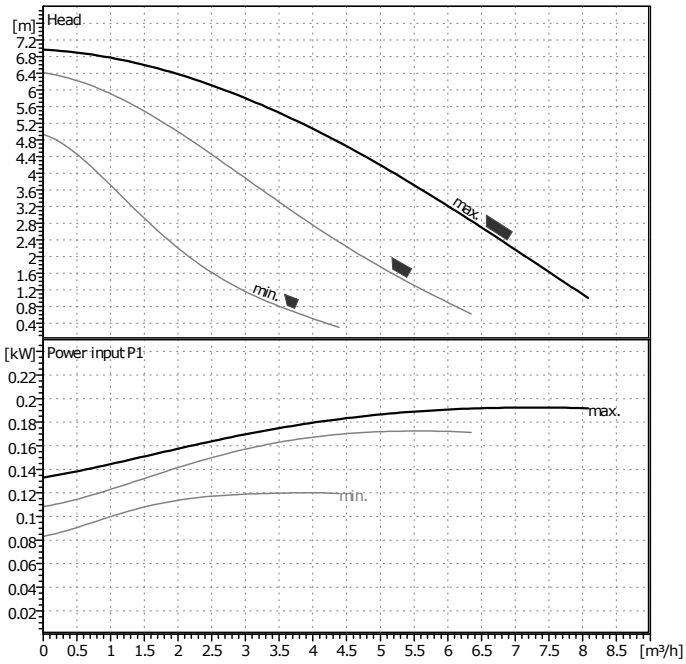


## Requested data

| | | |
|---|---|---|
| Flow | 0 | m³/h |
| Head | 0 | m |
| Fluid | Water, pure | |
| Fluid temperature | 20 | °C |
| Density | 0.9983 | kg/dm³ |
| Kinematic viscosity | 1.005 | mm²/s |
| Vapor pressure | 0.02337 | bar |

## Pump data

| | | |
|---|---|---|
| Make | WILO | |
| Type | TOP-STG 30/7 1~ PN 10 | |
| Pumpe type | Single head pump | |
| Pressure rating | PN10 | |
| Min. fluid temperature | -20 | °C |
| Max. fluid temperature | 110 | °C |

## Hydraulic data (duty point)

| | | |
|---|---|---|
| Flow | | m³/h |
| Head | | m |
| Power input P1 | | kW |
| Speed | 2600 | 1/min |

## Minimum suction head

| | | | | | | |
|---|---|---|---|---|---|---|
| Temperature | 50 | 95 | 110 | | | °C |
| Minimum suction head | 0.5 | 5 | 11 | | | m |

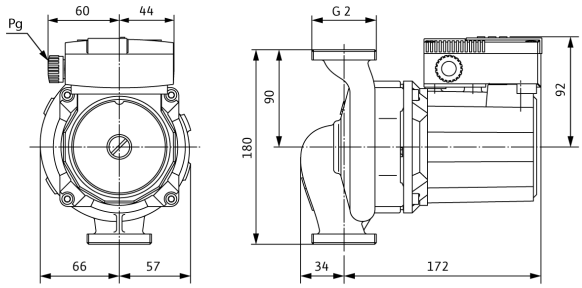


## Materials / Shaft seal

| | |
|---|---|
| Housing | EN-GJL-200 |
| Shaft | X 46 Cr 13 |
| Impeller | Fiber-reinforced PP |
| Bearing | Metal impregnated carbon |

## Dimensions per pump

mm

| | | | | | | | |
|---|---|---|---|---|---|---|---|
| | | | | | | | |

| | | |
|---|---|---|
| Suction side | 1¼"/G 2 | / PN 10 |
| Discharge side | 1¼"/G 2 | / PN 10 |
| Weight | 5 | kg |

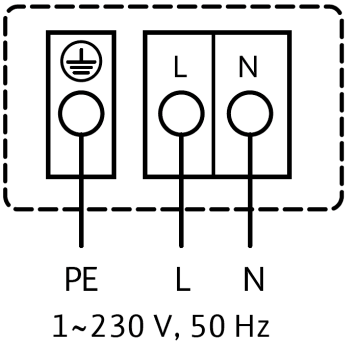


## Motordata per Motor/Pump/

| | | |
|---|---|---|
| Rated power P2 | 0.09 | kW |
| Power input P1 | 0.195 | kW |
| Nominal speed | 2600 | 1/min |
| Rated voltage | 1~230 V, 50 Hz | |
| Max. current | 0.93 | A |
| Degree of protection | IP X4D | |
| Permitted voltage tolerance +/- 10% | | |

Item no. of standard version 2131675